REVISIONS				
ECN#	REV	DESCRIPTION	DATE	BY
	A	INITIAL RELEASE	2/14/12	HC

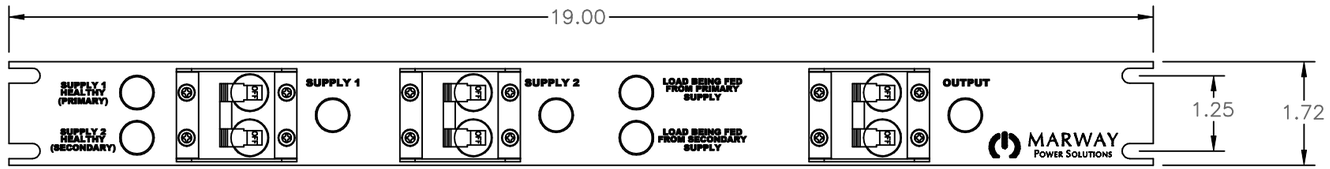

FRONT VIEW

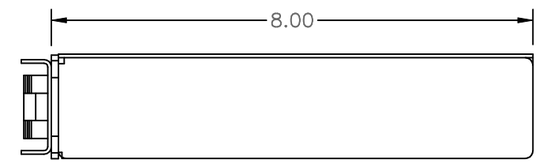

SIDE VIEW

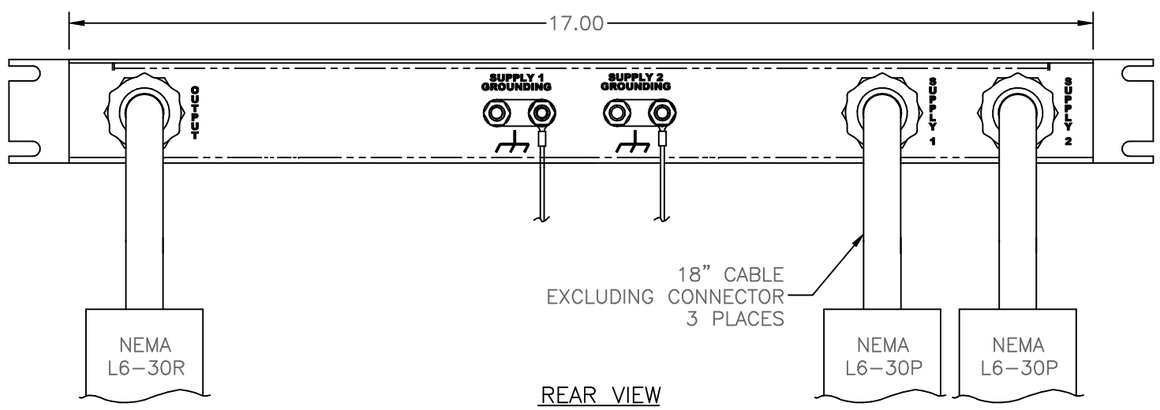

REAR VIEW

Configuration	Type	Auto Transfer
	Layout	1 U
Input 1	Voltage	208 VAC, Single Phase, 50/60 Hz
	Max Current	30 Amps
	Max Load	4.99 KVA
	Connection	L6-30P, 18 in cord, 3-wire 10 ga, SO jacket (Rear panel)
	Voltage Monitor	None
	Current Monitor	None
Input 2	Voltage	208 VAC, Single Phase, 50/60 Hz
	Max Current	30 Amps
	Max Load	4.99 KVA
	Connection	L6-30P, 18 in cord, 3-wire 10 ga, SO jacket (Rear panel)
	Voltage Monitor	None
	Current Monitor	None
Outlets	All Panels [1][2]	(1) L6-30R, 208V
Protection	Spike/Surge Suppression [1]	None
	EMI Filter [1]	None
	Over Current [1]	(2) 30A Main Breaker
Env Sensors	Temperature	None
	Humidity	None
	Interlocks	None
	EPO	None

Communications	Display	None
	Serial	None
	Ethernet	None
	Protocols	None
Physical	Dimensions	1 U x 19" W x 8" D
	Weight	lbs
	Materials	Chassis: Steel
	Finishes	Chassis: Zinc plated Gold, FrontPanel: Zinc plated Gold
Operating	Temperature	32°F to 122°F
	Humidity	5 %RH to 85 %RH
	Elevation	25,000 feet
Conformance	Warranty	http://www.marway.com/warranty
	Safety Certifications	None
	Environment Certifications	None
Notes:		
[1] Certain details of the circuitry may only be revealed by the schematic (available separately)		
[2] S = switched, V = monitored voltage, A = monitored amps		

UNLESS OTHERWISE SPECIFIED DIMENSIONS ARE IN INCHES
TOLERANCES ARE:
ANGLES ± .5° DECIMALS .XX ± .03 .XXX ± .010
DO NOT SCALE DRAWING
MATERIAL:
FINISH:

METAL NO.	SILK NO.
APPROVALS	DATE
DRAWN HC	2/14/12
CHECKED	
APPROVED	

PROPRIETARY NOTICE
THE INFORMATION CONTAINED IN THIS DRAWING IS THE SOLE PROPERTY OF MARWAY POWER SOLUTIONS ANY REPRODUCTION IN PART OR AS A WHOLE WITHOUT THE WRITTEN PERMISSION OF MARWAY POWER SOLUTIONS IS STRICTLY PROHIBITED.

MARWAY POWER SOLUTIONS
1721 S. GRAND AVE.
SANTA ANA, CA 92705
PH: (714) 917-6200
FX: (714) 917-6253

SPECIFICATION DRAWING–
MPD 411341–039

SIZE	CAGE CODE	DWG NO.	REV
D	60955	411341–039	A
SCALE	COMPUTER FILE NO. P411341–039 REV A	SHEET 1 OF 1	